도면번호 DWG NO

-

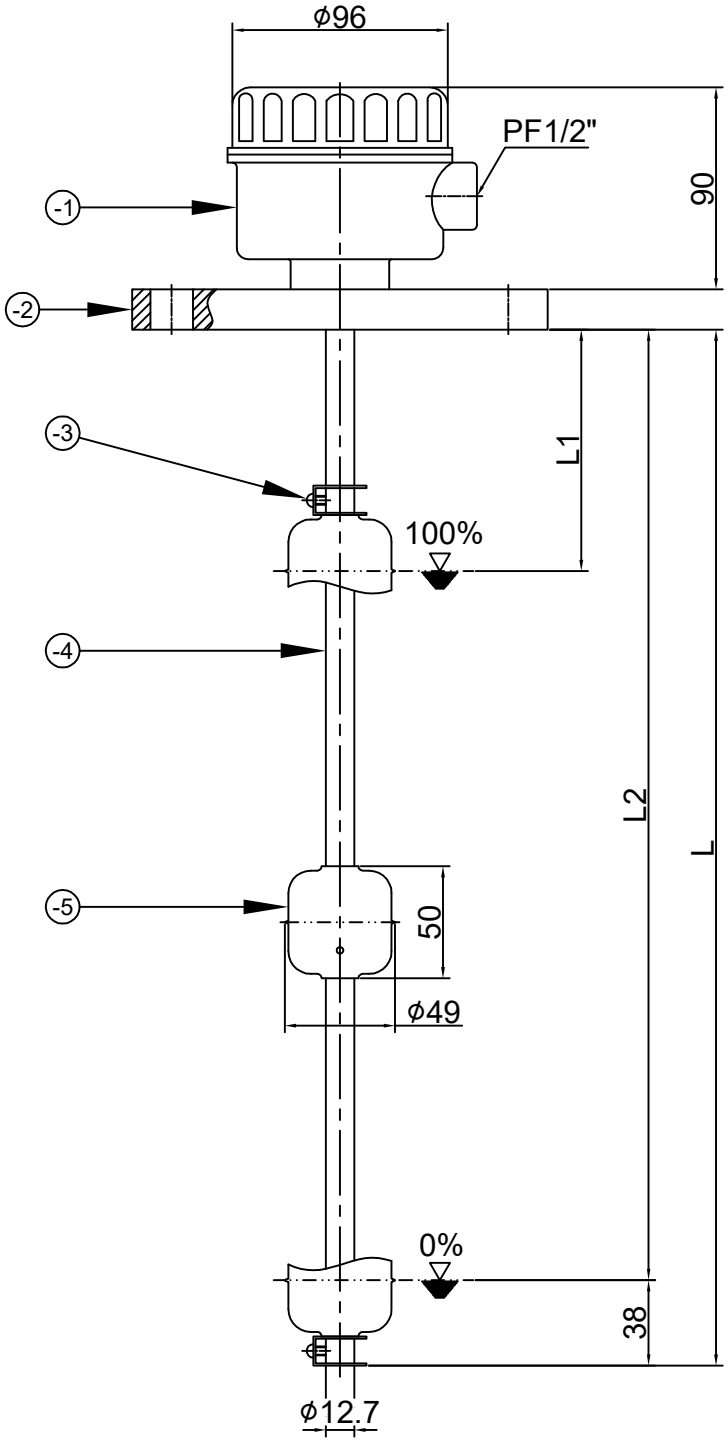

THIS DRAWING IS PROPRIETARY TO DSS
NO PART OF THIS DRAWING MAY BE REPRODUCED
WITHOUT THE PERMISSION OF DSS
허가없이 복사할 수 없음

(UNIT:mm)

L	L1	L2	-	-

ITEM NO	PART NAME	Q'TY	MATERIAL
-5	FLOAT	1	SUS304
-4	PIPE	1	SUS304
-3	STOPPER	2	SUS304
-2	FLANGE	1	SUS304
-1	HEAD	1	A.B.S
1	DT-200S2	1SET	-

SPECIFICATION	
MODEL NAME	DT-200S2
PRESSURE	MAX.10Kgf/㎠
TEMPERATURE	MAX. -10 ~ +60°C
APPLICATIONS	WATER, OIL, MEDICAL LIQUID
OUTPUT SIGNAL	4~20mA
INPUT SINGAL	DC24V
MOUNTING METHOD	TOP
MOUNTING SIZE	ORDER MADE
MATERRIAL	SUS304 / 316

REMARKS :
ORDER MADE(L1, L2, L=L2+38)

배 부 처

NO	DATE	REVISION	APPD BY
0	2014. 01.27	INITIAL RELEASE	K.B. HAN

TOLERANCES-UNLESS OTHERWISE SPECIFIED

SIZE (OVER / TO INCL.)	TURN PNCHG DIST.OF HOLE STR.	MLDG. DIE CSTG. PRCN. CSTG DRAW.	SH.MET WELD GAS CTG.	CSTG. FORG.
1 / 4	± 0.1	± 0.2	± 0.3	± 0.5
4 / 16	± 0.2	± 0.3	± 0.5	± 0.7
16 / 63	± 0.3	± 0.4	± 0.7	± 0.9
63 / 250	± 0.4	± 0.6	± 1.2	± 1.3
250 / 500	± 0.6	± 0.8	± 1.5	± 1.8
500 / 1000	± 0.8	± 1.0	± 2.0	± 2.5
1000 / 2000	± 1.2	± 1.5	± 2.5	± 3.3
ANGLE	± .25°	± .5°	± 1.0	± 2.0°

DONG SUNG SENSORS CO.,LTD.
TEL:(02)2101-0688~9 FAX:(02)2101-0687

표 준	DRWN BY 제 도	DSND BY 설 계	CHKD BY 검 토	APPD BY 승 인
임 시	J.H.HAN	K.B.HAN		
보 류				
DATE	2019.08.01.	2019.08.01.		

UNIT 단 위	MM, ~~INCH~~	APPAR.	-
SCALE 척 도	N / S	TITLE 제 목	DT-200S2
3RD ANGLE 3 각 법			
REF. NO 참고도면		DWG. NO 도면번호	- 1/1