DWG NO 도면번호

-

THIS DRAWING IS PROPRIETARY TO DSS
NO PART OF THIS DRAWING MAY BE REPRODUCED
WITHOUT THE PERMISSION OF DSS
허가없이 복사할 수 없음

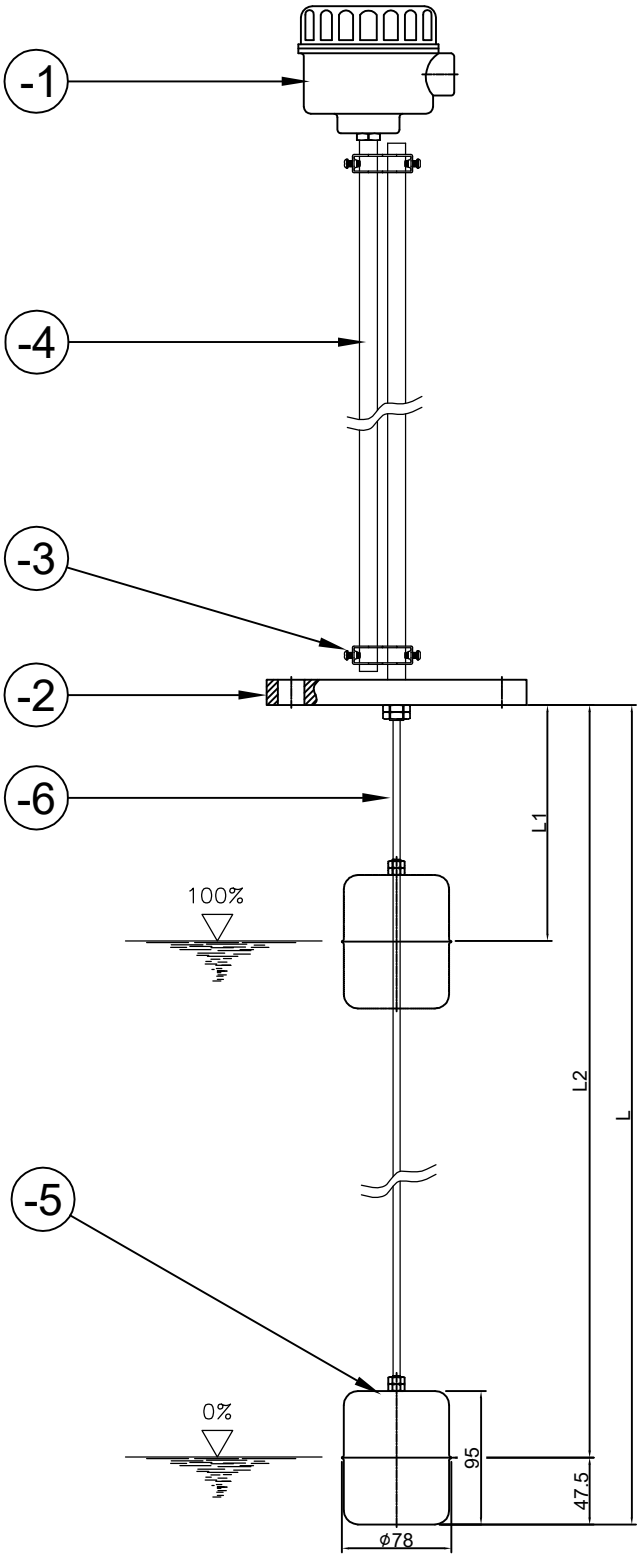

(UNIT:mm)

L	L1	L2	-	-

ITEM NO	PART NAME	Q'TY	MATERIAL
-6	SHAFT	1	SUS304
-5	FLOAT	1	SUS304
-4	PIPE	2	SUS304
-3	STOPPER	2	SUS304
-2	FLANGE	1	SUS304
-1	HEAD	1	A.B.S
1	DT-200S2-T	1SET	-

SPECIFICATION	
MODEL NAME	DT-200S2-T
PRESSURE	MAX.5Kgf/㎠
TEMPERATURE	MAX.130°C
APPLICATIONS	WATER, OIL, MEDICAL LIQUID
OUTPUT SIGNAL	4~20mA
INPUT SINGAL	DC24V
MOUNTING METHOD	TOP
MOUNTING SIZE	ORDER MADE
LENGTH(L)	ORDER MADE (Max.1500)

REMARKS :
ORDER MADE(L1, L2, L=L2+47.5)

배 부 처

NO	DATE	REVISION	APP'D BY
1	2014. 01.27	INITIAL RELEASE	K.B. HAN

TOLERANCES-UNLESS OTHERWISE SPECIFIED

SIZE (OVER / TO INCL.)	WORK: TURN PNCHG DIST.OF HOLE STR.	MLDG. DIE CSTG. PRCN. CSTG. DRAW.	SH.MET WELD GAS CTG.	CSTG. FORG.
1 / 4	± 0.1	± 0.2	± 0.3	± 0.5
4 / 16	± 0.2	± 0.3	± 0.5	± 0.7
16 / 63	± 0.3	± 0.4	± 0.7	± 0.9
63 / 250	± 0.4	± 0.6	± 1.2	± 1.3
250 / 500	± 0.6	± 0.8	± 1.5	± 1.8
500 / 1000	± 0.8	± 1.0	± 2.0	± 2.5
1000 / 2000	± 1.2	± 1.5	± 2.5	± 3.3
ANGLE	± .25°	± .5°	± 1.0	± 2.0°

DONG SUNG SENSORS CO.,LTD.
TEL:(02)2101-0688~9 FAX:(02)2101-0687

표준	DRWN BY 제 도	DSND BY 설 계	CHKD BY 검 토	APPD BY 승 인
임 시	J.H.HAN	K.B.HAN		
보 류				
DATE	2017.09.11.	2017.09.11.		

UNIT 단위: MM, ~~INCH~~
SCALE 척도: N / S
3RD ANGLE 3 각 법
REF. NO 참고도면
DWG. NO 도면번호: -

APPAR.: -
TITLE 제 목: DT-200S2-T

1/1