도면번호 DWG NO

-

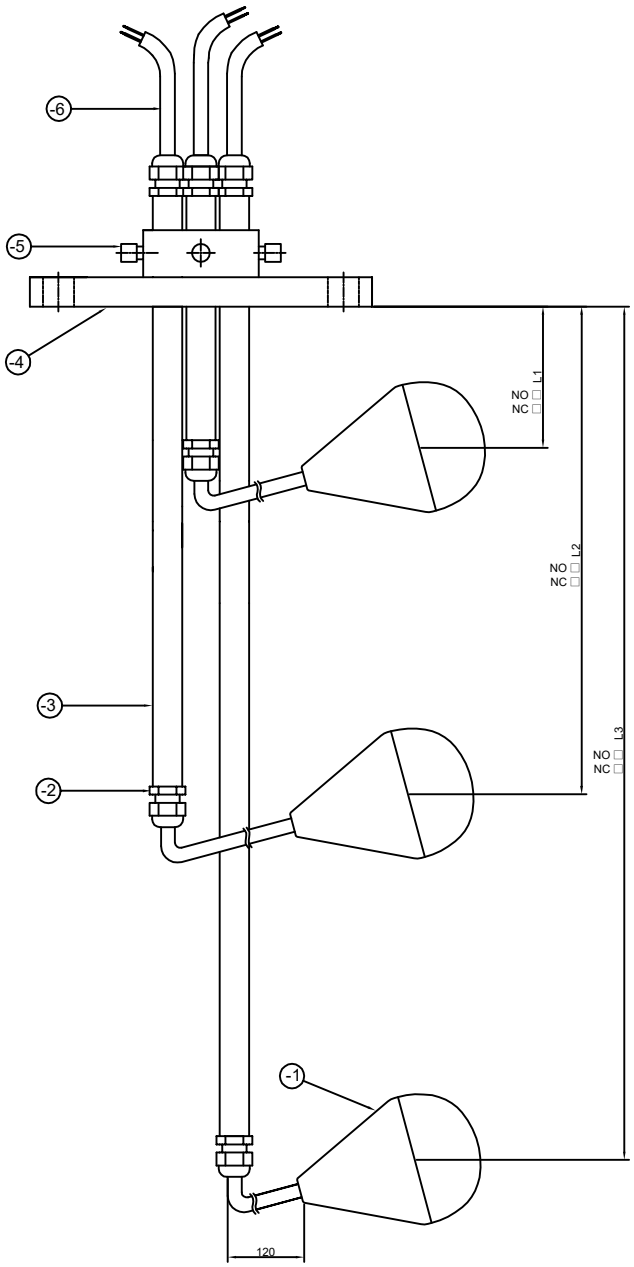

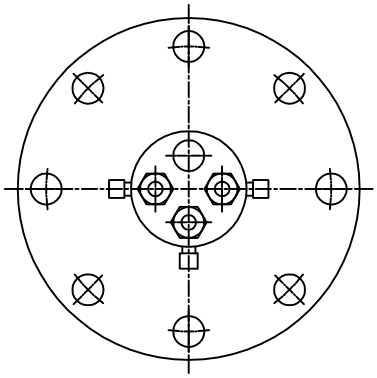

(UNIT:mm)

	L1	L2	L3	L4

ITEM NO	PART NAME	Q'TY	MATERIAL
-6	CABLE	3	P.V.C
-5	UP/DOWN BOLT	3	P.V.C
-4	FLANGE	1	P.V.C
-3	GUIDE PIPE	3	P.V.C
-2	CABLE GRAND	6	A.B.S
-1	DQ-1	3	A.B.S
1	DQ-13FN	1SET	-

SPECIFICATION	
MODEL NAME	DQ-13FN
PRESSURE	A.T.M
TEMPERATURE	MAX.50°C
APPLICATIONS	WATER, SLUDGY LIQUID, FACTORY DRAINAGE
SWITCHING CURRENT	AC220V, 3A
MOUNTING METHOD	TOP
MOUNTING SIZE	ORDER MADE

REMARKS :
ORDER MADE(L1, L2, L3, L4)

THIS DRAWING IS PROPRIETARY TO DSS
NO PART OF THIS DRAWING MAY BE REPRODUCED
WITHOUT THE PERMISSION OF DSS
DS기술(사) 복사 할 수 없음

배 부 처

NO	DATE	REVISION	APPD BY
0	2023. 03.25	INITIAL RELEASE	K.B. HAN

TOLERANCES-UNLESS OTHERWISE SPECIFIED

WORK / SIZE OVER	TO INCL	TURN PNCH'G DIST.OF HOLE STR.	MLDG. DIE CSTG. PRCN. CSTG. DRAW.	SH.MET WELD GAS CTG.	CSTG. FORG.
1	4	± 0.1	± 0.2	± 0.3	± 0.5
4	16	± 0.2	± 0.3	± 0.5	± 0.7
16	63	± 0.3	± 0.4	± 0.7	± 0.9
63	250	± 0.4	± 0.6	± 1.2	± 1.3
250	500	± 0.6	± 0.8	± 1.5	± 1.8
500	1000	± 0.8	± 1.0	± 2.0	± 2.5
1000	2000	± 1.2	± 1.5	± 2.5	± 3.3
ANGLE		± .25°	± .5°	± 1.0	± 2.0°

DONG SUNG SENSORS CO.,LTD.
TEL:(02)2101-0688~9 FAX:(02)2101-0687

표 준	DRWN BY 제 도	DSND BY 설 계	CHKD BY 검 토	APPD BY 승 인
임 시 보 류	J.H.HAN	K.B.HAN		
DATE	2023.03.25.	2023.03.25.		

UNIT 단 위: MM, ~~INCH~~
SCALE 척 도: N / S
3RD ANGLE 3 각 법
REF. NO 참고도면
DWG. NO 도면번호

APPAR.: -
TITLE 제 목: DQ-13FN
DWG. NO: -
1/1