도면번호 DWG NO
-

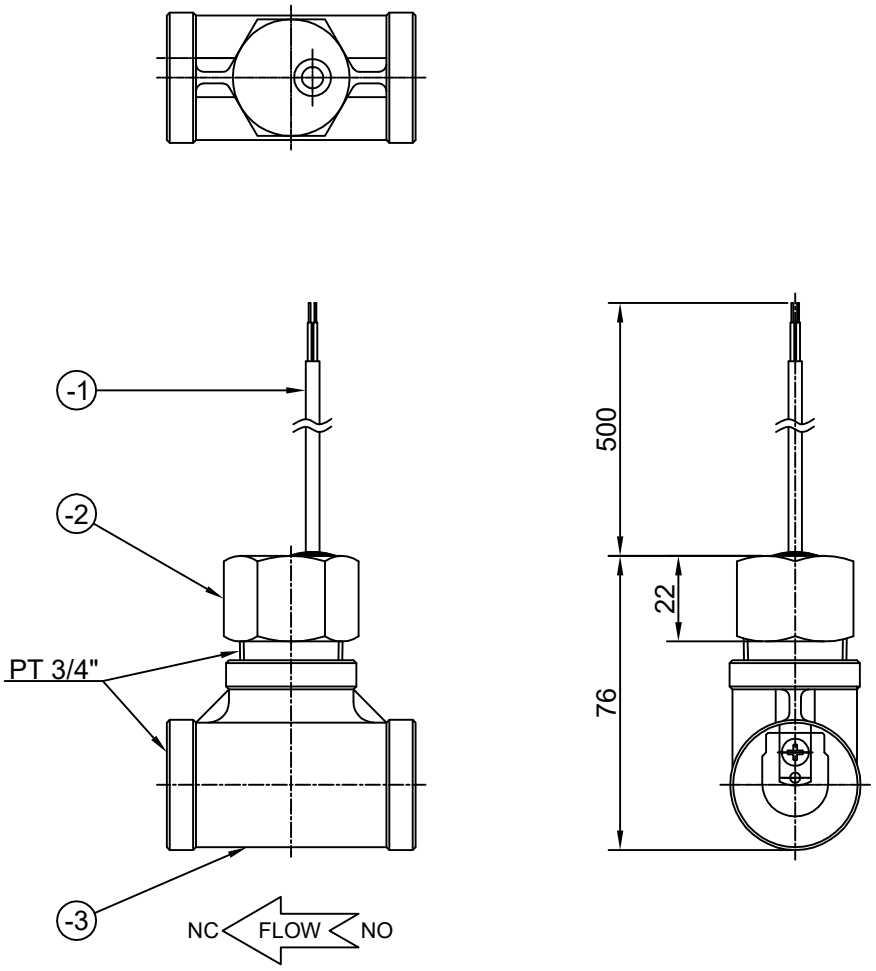

ITEM NO	PART NAME	Q'TY	MATERIAL
-3	TEE	1	SUS304
-2	BODY	1	BRASS
-1	LEAD WIRES	1	P.V.C
1	DFS-2-3/4BRT	1SET	-

SPECIFICATION	
MODEL NAME	DFS-2-3/4BRT
PRESSURE	MAX.10Kgf/㎠
TEMPERATURE	MAX.100°C
SWITCHING CURRENT	AC220V, 1A, 50VA
MOUNTING METHOD	HORIZONTAL, VERTICAL
MOUNTING SIZE	PT3/4"
FLOW RATE	25~15ℓ/Min
APPLICATIONS	WATER, OIL

REMARKS :

THIS DRAWING IS PROPRIETARY TO DSS
NO PART OF THIS DRAWING MAY BE REPRODUCED
WITHOUT THE PERMISSION OF DSS
이 도면은 복사할 수 없음

배 부 처

NO	DATE	REVISION	APPD BY
1	2014. 01.27	INITIAL RELEASE	K.B. HAN

TOLERANCES-UNLESS OTHERWISE SPECIFIED

SIZE OVER	SIZE TO INCL	TURN PNCH'G DIST.OF HOLE STR.	MLDG. DIE CSTG. PRCN. CSTG DRAW.	SH.MET WELD GAS CTG.	CSTG. FORG.
1	4	± 0.1	± 0.2	± 0.3	± 0.5
4	16	± 0.2	± 0.3	± 0.5	± 0.7
16	63	± 0.3	± 0.4	± 0.7	± 0.9
63	250	± 0.4	± 0.6	± 1.2	± 1.3
250	500	± 0.6	± 0.8	± 1.5	± 1.8
500	1000	± 0.8	± 1.0	± 2.0	± 2.5
1000	2000	± 1.2	± 1.5	± 2.5	± 3.3
ANGLE		± .25°	± .5°	± 1.0°	± 2.0°

DONG SUNG SENSORS CO.,LTD.
TEL:(02)2101-0688~9 FAX:(02)2101-0687

표 준	DRWN BY 제 도	DSND BY 설 계	CHKD BY 검 토	APPD BY 승 인
임 시 보 류	J.S.LIM	K.B.HAN		
DATE	2013.12.16.	2014.01.14.		

UNIT 단위	MM, ~~INCH~~	APPAR.	-
SCALE 척도	N / S	TITLE 제 목	- DFS-2-3/4BRT
3RD ANGLE 3 각 법			
REF. NO 참고도면		DWG. NO 도면번호	- 1/1