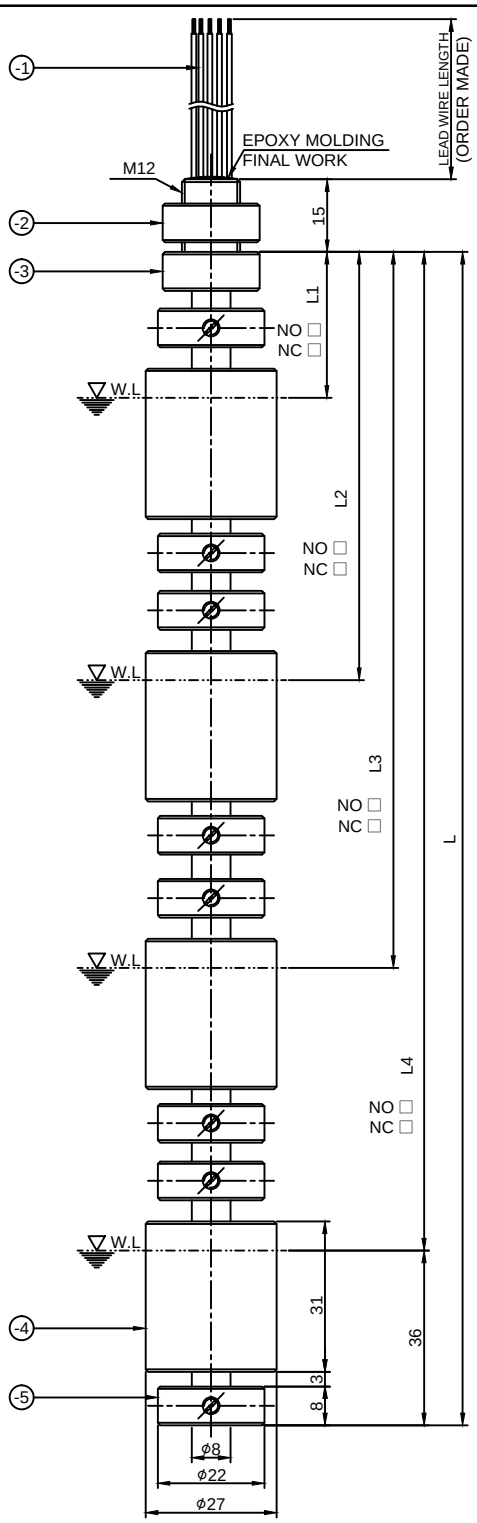

(UNIT:mm)

L	L1	L2	L3	L4

ITEM NO	PART NAME	QTY	MATERIAL
-5	STOPPER	8	P.T.F.E
-4	FLOAT	4	P.T.F.E
-3	STEM	1	P.T.F.E
-2	NUT	1	P.T.F.E
-1	LEAD WIRES	5	P.T.F.E
1	DFR-11T-4F	1	-

SPECIFICATION	
MODEL NAME	DFR-11T-4F
PRESSURE	ATM
TEMPERATURE	MAX.80°C
APPLICATIONS	WATER, MEDICAL LIQUID
SWITCHING CURRENT	AC220V,0.2A,50VA
MOUNTING METHOD	TOP & BOTTOM
MOUNTING SIZE	M12

REMARKS :
ORDER MADE(L1, L2, L3, L4, L=L4+36)

DWG NO 도면번호 -

THIS DRAWING IS PROPRIETARY TO DSS.
NO PART OF THIS DRAWING MAY BE REPRODUCED
WITHOUT THE PERMISSION OF DSS
이 도면의 복사본 수 금지

배 부 처

NO	DATE	REVISION	APPD BY
A	2014.02.27	INITIAL RELEASE	MAN

TOLERANCES-UNLESS OTHERWISE SPECIFIED

MODEL	TURN PROTO	MILDG. DIE CSTG. PRION. CSTG. SHAW.	SH.MET WELD SAN CTG.	CSTG. FORG.
SUN				
0~3	± 0.1	± 0.2	± 0.2	± 0.5
4 ~ 18	± 0.2	± 0.3	± 0.5	± 0.7
19 ~ 63	± 0.3	± 0.4	± 0.7	± 0.9
63 ~ 250	± 0.4	± 0.7	± 1.2	± 1.3
250 ~ 500	± 0.6	± 1.0	± 1.5	± 1.8
500 ~ 1000	± 0.8	± 1.0	± 2.0	± 2.5
1000 ~ 2000	± 1.0	± 1.5	± 2.5	± 3.3
ANGLE	± 20'	± 5°	± 1.0°	± 2.0°

DONG SUNG SENSORS CO.,LTD.
TEL:(02)2025-8988~9 FAX:(02)2025-8987

표준	DRWN BY 제 도	DSND BY 설 계	CHKD BY 검 도	APPD BY 승 인
임 시	J.H.HAN	K.B.HAN		
보 류				
DATE	2017.04.18.	2017.04.19.		

UNIT 단위: MM, ~~INCH~~
SCALE 척도: N/S
3RD ANGLE 3 각 법
REF. NO 참고도면
DWG. NO 도면번호

APPAR. -
TITLE 제 목 DFR-11T-4F
- 1/1