도면번호 DWG NO

-

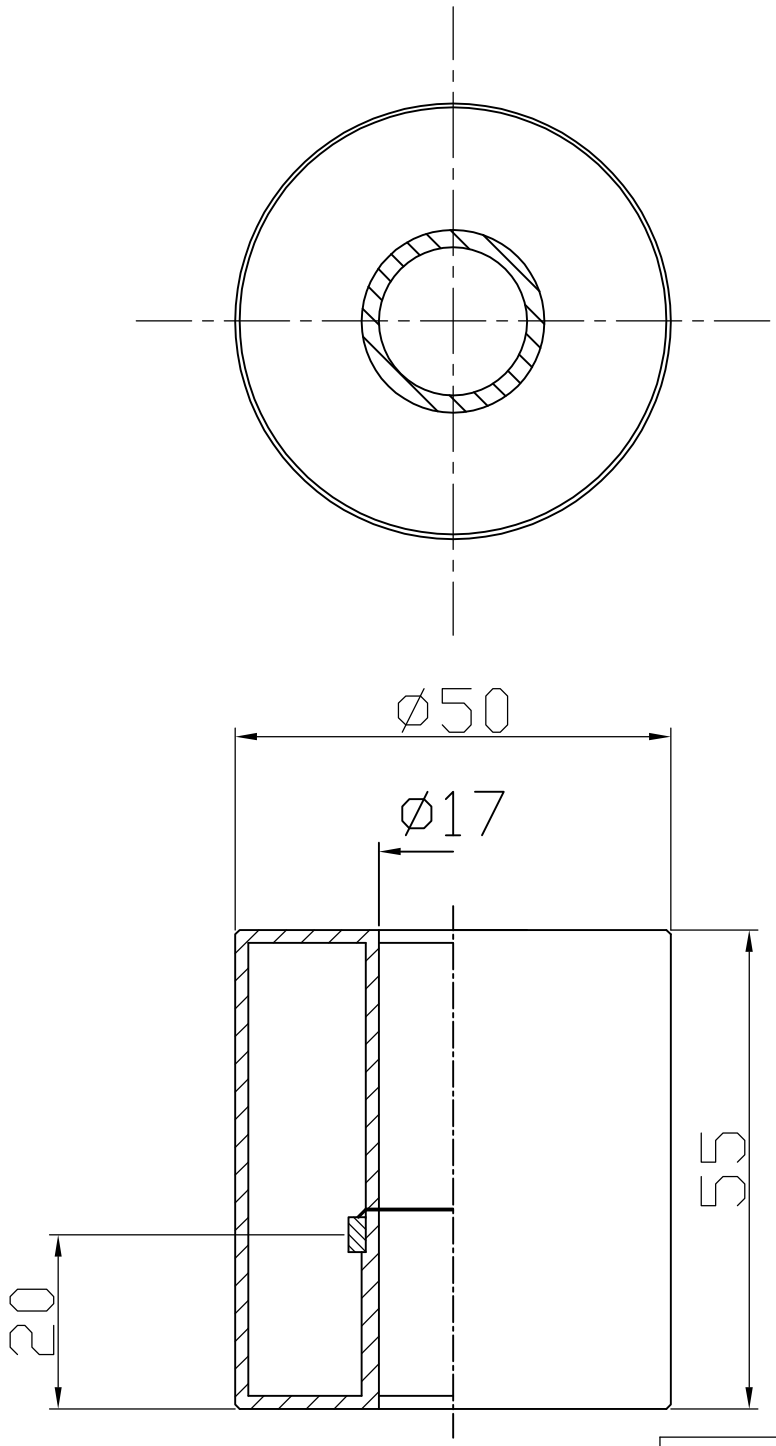

SPECIFICATION	
MODEL NAME	DF-T3
PRESSURE	ATM
TEMPERATURE	MAX.80°C
DIMENSION	ø50xH55xø17
WEIGHT	69g
SPECIFIC GRAVITY	0.72
MATERRIAL	P.T.F.E
REMARKS:	

THIS DRAWING IS PROPRLETARY TO DSS
NO PART OF THIS DRAWING MAY BE
REPRODUCED
WITHOUT THE PERMISSION OF DSS
허가없이 복사할 수 없음

배 부 처

NO	DATE	REVISION	APPD BY
0	2014.01.27	INITIAL RELEASE	K.B.HAN

TOLERANCES-UNLESS OTHERWISE SPECIFIED

WORK SIZE OVER	TO INCL.	TURN PNCH'G DIST.OF HOLE STR.	ML.DG. DIE CSTG. PRCN. CSTG. DRAW.	SH.MET WELD GAS CTG.	CSTG. FORG.
1	4	± 0.1	± 0.2	± 0.3	± 0.5
4	16	± 0.2	± 0.3	± 0.5	± 0.7
16	63	± 0.3	± 0.4	± 0.7	± 0.9
63	250	± 0.4	± 0.6	± 1.2	± 1.3
250	500	± 0.6	± 0.8	± 1.5	± 1.8
500	1000	± 0.8	± 1.0	± 2.0	± 2.5
1000	2000	± 1.2	± 1.5	± 2.5	± 3.3
ANGLE		± .25°	± .5°	± 1.0°	± 2.0°

DONG SUNG SENSORS CO.,LTD.
TEL:(02)2101-0688~9 FAX:(02)2101-0687

표준	DRWN BY 제도	DSND BY 설계	CHKD BY 검토	APPD BY 승인
임시	J.H.HAN	K.B.HAN		
보류				
DATE	2019.01.16.	2019.01.16.		

UNIT 단위	MM, ~~INCH~~	APPAR.	-
SCALE 척도	N/S	TITLE 제목	DF-T3
3RD ANGLE 3 각법			
REF. NO 참고도면		DWG. NO 도면번호	-

1/1