도면번호 DWG NO

-

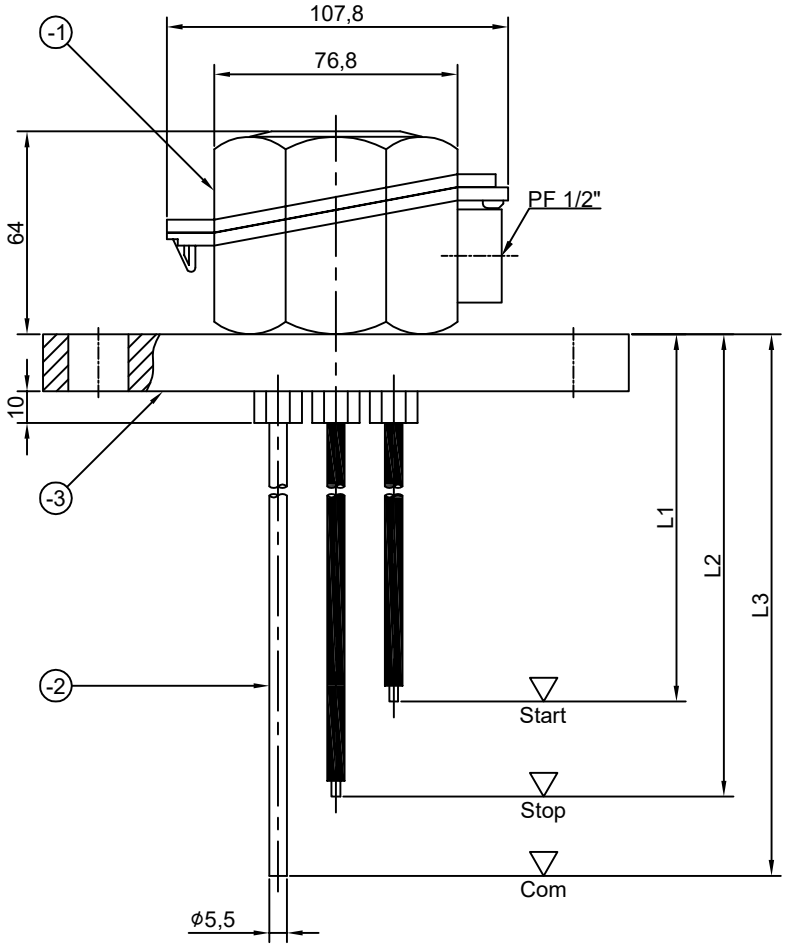

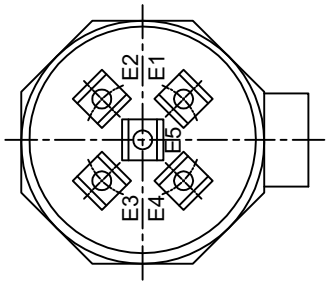

E2 : Pump Start
E3 : Pump Stop
E5 : Common

(UNIT:mm)

L1	L2	L3	-	-

ITEM NO	PART NAME	Q'TY	MATERIAL
-3	FLANGE	1	P.V.C
-2	ELECTRODE	3	P.E + SUS304
-1	HEAD	1	A.B.S
1	DES-3F	1SET	-

SPECIFICATION	
MODEL NAME	DES-3F
PRESSURE	A.T.M
TEMPERATURE	-10~+60°C
APPLICATIONS	WATER
WIRE CONNECTION	3-WIRE
MOUNTING METHOD	TOP
MOUNTING SIZE	ORDER MADE
LOOP IMPEDANCE	500Ω(15V DC)
MEASURING RANGE	MAX. 5M

REMARKS :

THIS DRAWING IS PROPRIETARY TO DSS
NO PART OF THIS DRAWING MAY BE REPRODUCED
WITHOUT THE PERMISSION OF DSS
허가없이 복사할 수 없음

배 부 처

NO	DATE	REVISION	APPD BY
0	2014. 01.27	INITIAL RELEASE	K.B. HAN

TOLERANCES-UNLESS OTHERWISE SPECIFIED

WORK SIZE OVER	TO INCL.	TURN PNCH'G DIST.OF HOLE STR.	MLDG. DIE CSTG. PRCN. CSTG. DRAW.	SH.MET WELD GAS CTG.	CSTG. FORG.
1	4	± 0.1	± 0.2	± 0.3	± 0.5
4	16	± 0.2	± 0.3	± 0.5	± 0.7
16	63	± 0.3	± 0.4	± 0.7	± 0.9
63	250	± 0.4	± 0.6	± 1.2	± 1.3
250	500	± 0.6	± 0.8	± 1.5	± 1.8
500	1000	± 0.8	± 1.0	± 2.0	± 2.5
1000	2000	± 1.2	± 1.5	± 2.5	± 3.3
ANGLE		± .25°	± .5°	± 1.0°	± 2.0°

DONG SUNG SENSORS CO.,LTD.
TEL:(02)2101-0688~9 FAX:(02)2101-0687

표 준	DRWN BY 제 도	DSND BY 설 계	CHKD BY 검 토	APPD BY 승 인
임 시 보 류	J.H.HAN		K.B.HAN	
DATE	2017.06.27.		2017.06.28.	

UNIT 단 위: MM, ~~INCH~~
SCALE 척 도: N / S
3RD ANGLE 3 각 법
REF. NO 참고도면

APPAR.: -
TITLE 제 목: DES-3F
DWG. NO 도면번호: -
1/1