DWG NO 도면번호

-

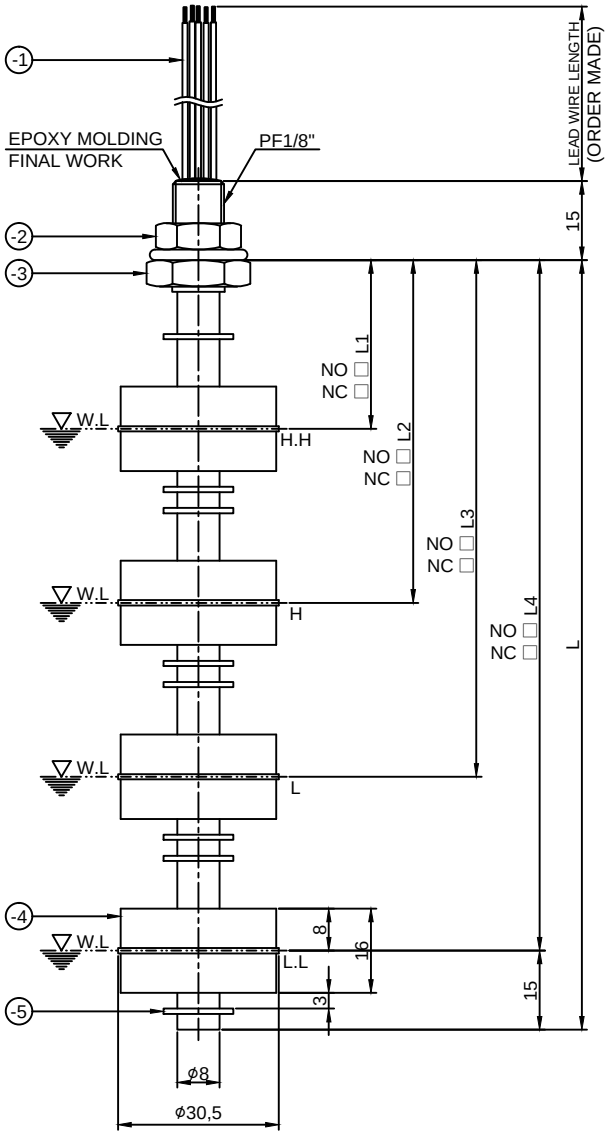

(UNIT:mm)

L	L1	L2	L3	L4

ITEM NO	PART NAME	Q'TY	MATERIAL
-5	E-RING	8	SUS304
-4	FLOAT	4	P.P
-3	STEM	1	SUS304
-2	HEX.NUT	1	SUS304
-1	LEAD WIRES	5	P.V.C
1	DFR-2C-4F	1	-

SPECIFICATION	
MODEL NAME	DFR-2C-4F
PRESSURE	MAX.2Kgf/㎠
TEMPERATURE	MAX.90°C
APPLICATIONS	WATER, OIL
SWITCHING CURRENT	AC220V,0.2A,50VA
MOUNTING METHOD	TOP & BOTTOM
MOUNTING SIZE	PF1/8"

REMARKS :
ORDER MADE(L1, L2, L3,L4, L=L4+15)

THIS DRAWING IS PROPRIETARY TO DSS
NO PART OF THIS DRAWING MAY BE REPRODUCED
WITHOUT THE PERMISSION OF DSS
허가없이 복사할 수 없음

배 부 처

NO	DATE	REVISION	APPD BY
A	2014. 01.27	INITIAL RELEASE	K.B. HAN

TOLERANCES-UNLESS OTHERWISE SPECIFIED

SIZE OVER	SIZE INCL.	WORK: TURN PNCH'G DIST.OF HOLE STR.	MLDG. DIE CSTG. PRCN. CSTG DRAW.	SH.MET WELD GAS CTG.	CSTG. FORG.
1	4	± 0.1	± 0.2	± 0.3	± 0.5
4	16	± 0.2	± 0.3	± 0.5	± 0.7
16	63	± 0.3	± 0.4	± 0.7	± 0.9
63	250	± 0.4	± 0.6	± 1.2	± 1.3
250	500	± 0.6	± 0.8	± 1.5	± 1.8
500	1000	± 0.8	± 1.0	± 2.0	± 2.5
1000	2000	± 1.2	± 1.5	± 2.5	± 3.3
ANGLE		± .25°	± .5°	± 1.0	± 2.0°

DONG SUNG SENSORS CO.,LTD.
TEL:(02)2025-8988~9 FAX:(02)2025-8987

표준	DRWN BY 제 도	DSND BY 설 계	CHKD BY 검 토	APPD BY 승 인
임 시 보 류	J.H.HAN	K.B.HAN		
DATE	2017.04.27.	2017.04.27.		

UNIT 단 위: MM, ~~INCH~~
SCALE 척 도: N/S
3RD ANGLE 3 각 법
REF. NO 참고도면

APPAR.: -
TITLE 제 목: DFR-2C-4F
DWG. NO 도면번호: -
1/1