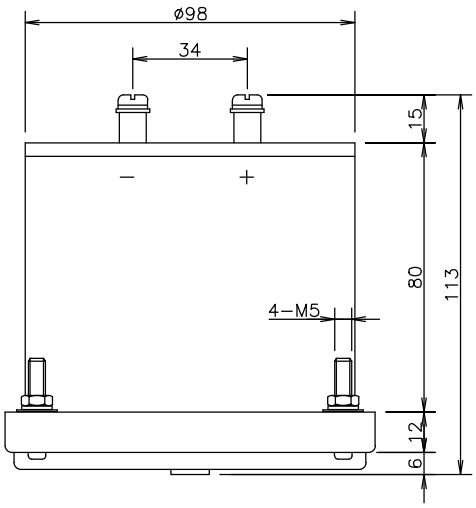

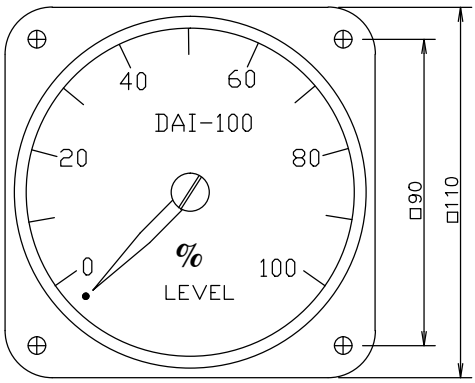

SPECIFICATION	
MODEL NAME	DAI-100
INPUT SIGNAL	4~20mA DC
INTERNAL RESISTANCE	1.5Ω
APPLICATIONS	FOR PANEL LOCAL INDICATION
CLASS	1.5 F.S
MOUNTING METHOD	PANEL MOUNT
SCALE RANGE	0~100%
AMBIENT TEMPERATURE	−20 ~ +60°C
WEIGHT	APPROX. 450g
DIMENSION (mm)	110x110 SQUARE
REMARKS:	

THIS DRAWING IS PROPRIETARY TO DSS
NO PART OF THIS DRAWING MAY BE REPRODUCED
WITHOUT THE PERMISSION OF DSS
허가없이 복사할 수 없음

배 부 처	

NO	DATE	REVISION	APPD BY

TOLERANCES—UNLESS OTHERWISE SPECIFIED

SIZE OVER	SIZE TO INCL.	WORK: TURN PNCH'G DIST.OF HOLE STR.	MLDG. DIE CSTG. PRCN.CSTG DRAW.	SH.MET WELD GAS CTG.	CSTG. FORG.

DONG SUNG SENSORS CO.
TEL 02)2025-8988,9 FAX 02)2025-8987

표 준	DRWN BY 제 도	DSND BY 설 계	CHKD BY 검 토	APPD BY 승 인
임 시 보 류	J.H.HAN		K.B.HAN	
DATE	2017.06.27		2017.06.28	

UNIT 단위	MM. ~~INCH~~	APPAR.
SCALE 척도	N/S	TITLE 제목 DAI-100
3RD ANGLE 3 각 법		
REF. NO 참고도면		DWG. NO 도면번호

1/1