도면번호 DWG NO

-

THIS DRAWING IS PROPRIETARY TO DSS
NO PART OF THIS DRAWING MAY BE REPRODUCED
WITHOUT THE PERMISSION OF DSS
이 도면의 사본은 ✦ 입니다

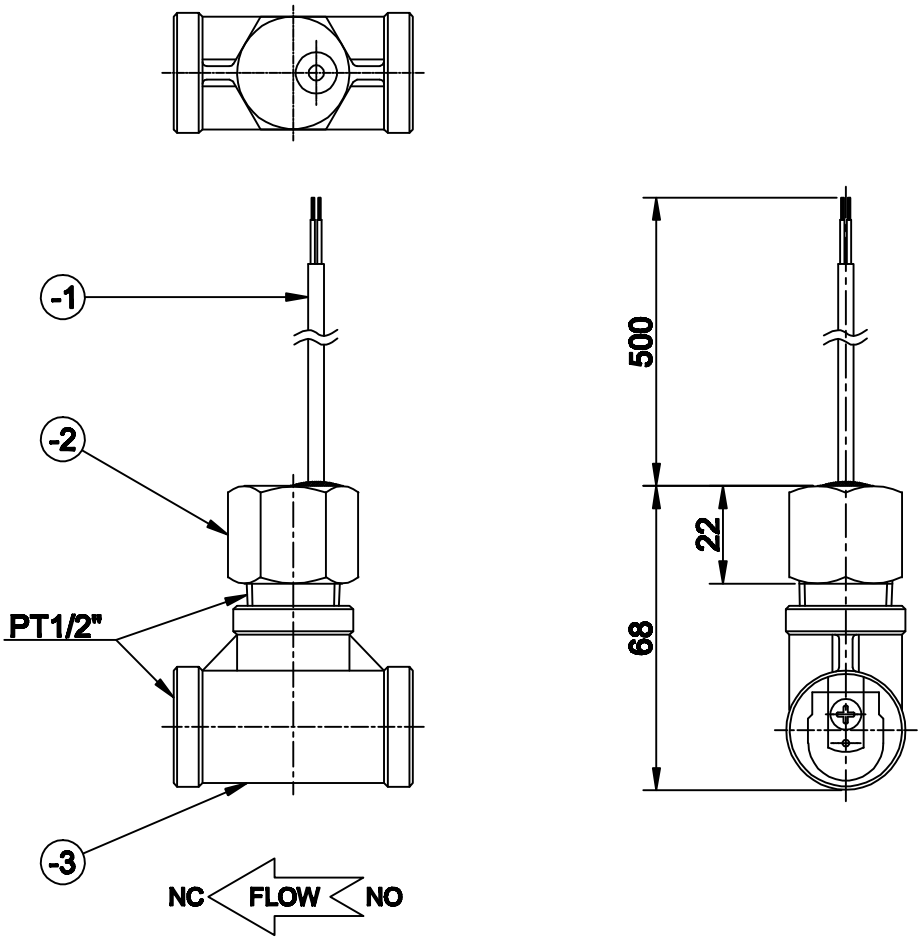

ITEM NO	PART NAME	QTY	MATERIAL
-3	TEE	1	SUS304
-2	BODY	1	BRASS
-1	LEAD WIRES	1	P.V.C
1	DFS-2-1/2BRT	1SET	-

SPECIFICATION	
MODEL NAME	DFS-2-1/2BRT
PRESSURE	MAX.10Kgf/㎠
TEMPERATURE	MAX.100°C
SWITCHING CURRENT	AC220V, 1A, 50VA
MOUNTING METHOD	HORIZONTAL, VERTICAL
MOUNTING SIZE	PT1/2"
FLOW RATE	25~15ℓ/Min
APPLICATIONS	WATER, OIL
REMARKS :	

배 부 처

NO	DATE	REVISION	APPD BY
△1	2014. 01.27	INITIAL RELEASE	K.B. HAN

TOLERANCES-UNLESS OTHERWISE SPECIFIED

SIZE (over / to incl.)	WORK: THIN PLATE, SHEARED, HOLE CTR.	MIDD. SHEARED, BEND CTR., PUNCH, CTR., DRILL	SHARP BEND, BAD CTR.	CAST, FORG.
1 / 4	±0.1	±0.2	±0.3	±0.5
4 / 10	±0.2	±0.3	±0.5	±0.7
10 / 65	±0.3	±0.4	±0.7	±0.9
65 / 250	±0.4	±0.6	±1.2	±1.3
250 / 600	±0.5	±0.8	±1.5	±1.8
600 / 1000	±0.6	±1.0	±2.0	±2.5
1000 / 2000	±1.2	±1.5	±2.5	±3.3
ANGLE	±.25°	±.5°	±1.0°	±2.0°

DONG SUNG SENSORS CO.,LTD.
TEL:(02)2025-8988~9 FAX:(02)2025-8987

표준	DRAWN BY 제도	DSND BY 설계	CHKD BY 검토	APPD BY 승인
임시 보류	J.S.LIM	K.B.HAN		
DATE	2013.12.13.	2014.01.13.		

UNIT 단위	MM, INCH	APPAR.	-
SCALE 축도	N / S	TITLE 제목	- DFS-2-1/2BRT
3RD ANGLE 3 각 법			
REF. NO 참고도면		DWG. NO 도면번호	- 1/1