도면번호 DWG NO

-

THIS DRAWING IS PROPRIETARY TO DSS
NO PART OF THIS DRAWING MAY BE REPRODUCED
WITHOUT THE PERMISSION OF DSS
이 도면의 사본은 ✦ 없음

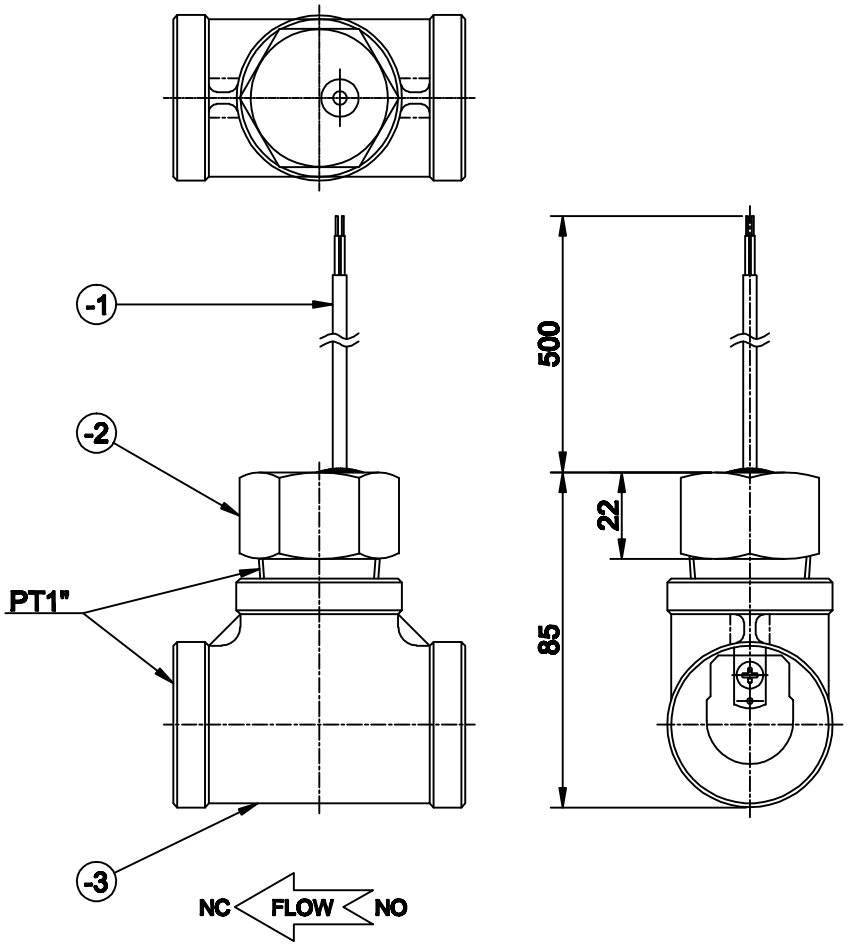

ITEM NO	PART NAME	QTY	MATERIAL
-3	TEE	1	SUS304
-2	BODY	1	SUS304
-1	LEAD WIRES	1	P.V.C
1	DFS-2-1SRT	1SET	-

SPECIFICATION	
MODEL NAME	DFS-2-1SRT
PRESSURE	MAX.10Kgf/㎠
TEMPERATURE	MAX.100°C
SWITCHING CURRENT	AC220V, 1A, 50VA
MOUNTING METHOD	HORIZONTAL, VERTICAL
MOUNTING SIZE	PT1"
FLOW RATE	25~15ℓ/Min
APPLICATIONS	WATER, OIL
REMARKS :	

배 부 처	

NO	DATE	REVISION	APPD BY
△1	2014. 01.27	INITIAL RELEASE	K.B. HAN

TOLERANCES-UNLESS OTHERWISE SPECIFIED

SIZE (OVER)	TO (INCL.)	WORK: THIN PLATE, BENDER, HOLE CTR.	MIDD. DIE CTR., PUNCH, CTR., DRWG.	SHARP BEND END CTR.	CTR. FIXT.
1	4	±0.1	±0.2	±0.3	±0.5
4	10	±0.2	±0.3	±0.5	±0.7
10	65	±0.3	±0.4	±0.7	±0.9
65	250	±0.4	±0.6	±1.2	±1.3
250	600	±0.5	±0.8	±1.5	±1.8
600	1000	±0.6	±1.0	±2.0	±2.5
1000	2000	±1.2	±1.5	±2.5	±3.3
ANGLE		±.25°	±.5°	±1.0°	±2.0°

DONG SUNG SENSORS CO.,LTD.
TEL:(02)2025-8988~9 FAX:(02)2025-8987

표준	DRAWN BY 제도	DSND BY 설계	CHKD BY 검토	APPD BY 승인
임시	J.S.LIM		K.B.HAN	
보류				
DATE	2013.12.16.		2014.01.14.	

UNIT 단위: MM, INCH
SCALE 축도: N / S
3RD ANGLE 3 각 법
REF. NO 참고도면

APPAR.: -
TITLE 제목: - DFS-2-1SRT
DWG. NO 도면번호: -
1/1