도면번호 DWG NO

-

THIS DRAWING IS PROPRIETARY TO DSS
NO PART OF THIS DRAWING MAY BE REPRODUCED
WITHOUT THE PERMISSION OF DSS
이 도면의 사본은 + 금지

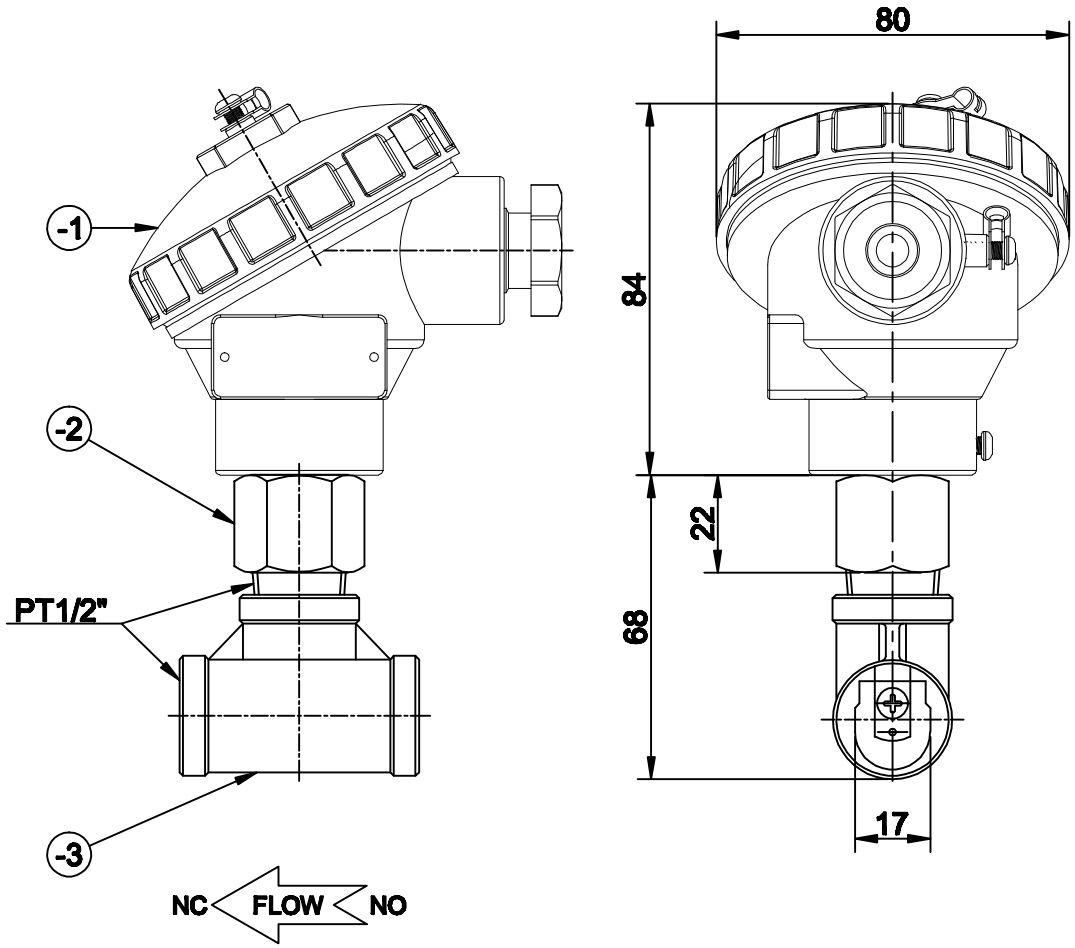

ITEM NO	PART NAME	QTY	MATERIAL
-3	TEE	1	SUS304
-2	BODY	1	SUS304
-1	HEAD	1	ADC12
1	DFS-2-1/2SRHT	1SET	-

SPECIFICATION	
MODEL NAME	DFS-2-1/2SRHT
PRESSURE	MAX.10Kgf/㎠
TEMPERATURE	MAX.100°C
SWITCHING CURRENT	AC220V, 1A, 50VA
MOUNTING METHOD	HORIZONTAL, VERTICAL
MOUNTING SIZE	PT1/2"
FLOW RATE	25~15ℓ/Min
APPLICATIONS	WATER, OIL
REMARKS :	

배 부 처

NO	DATE	REVISION	APPD BY
△1	2014.01.27	INITIAL RELEASE	K.B. HAN

TOLERANCES-UNLESS OTHERWISE SPECIFIED

SIZE (OVER / TO INCL.)	WORK: THIN PLATE, SHEARED, MILD STEL	MILD, RM STEL, FOGS, CSTG, SHAPE, SINTER	SHARP MILD CAST-STEL	CSTG, FORG.
1 / 4	±0.1	±0.2	±0.3	±0.5
4 / 10	±0.2	±0.3	±0.5	±0.7
10 / 63	±0.3	±0.4	±0.7	±0.9
63 / 250	±0.4	±0.6	±1.2	±1.3
250 / 630	±0.5	±0.8	±1.5	±1.8
630 / 1000	±0.6	±1.0	±2.0	±2.5
1000 / 2000	±1.2	±1.5	±2.5	±3.3
ANGLE	±.25°	±.5°	±1.0°	±2.0°

DONG SUNG SENSORS CO.,LTD.
TEL:(02)2025-8966~9 FAX:(02)2025-8967

	DRAWN BY	DSND BY	CHKD BY	APPD BY
표준	제 도	설 계	검 토	승 인
임 시 보 류	J.S.LIM		K.B.HAN	
DATE	2013.12.16.		2014.01.14.	

UNIT 단위: MM, INCH
SCALE 축도: N / S
3RD ANGLE 3 각 법
REF. NO 참고도면

APPAR.: -
TITLE 제 목: - DFS-2-1/2SRHT
DWG. NO 도면번호: -
1/1